# VTK-KPV5-002 - SHELVING KIT SPECIFICATIONS

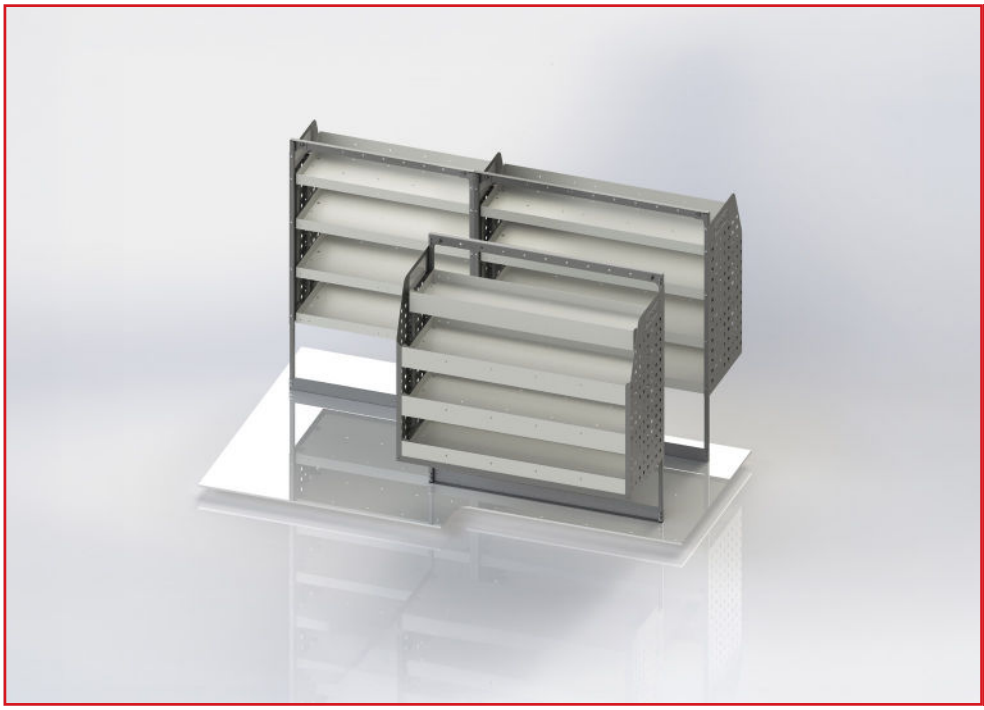

## VTK-KPV5-002

TO SUIT THE FOLLOWING:

**Model: PV5**
**Make: Kia**
**Wheel Base: N/A**
**Year: 2026+**
**Fuel Type: Electric**

Please check manufacturing plate for the make and model of your vehicle.

Fooring depicted in images not included in Trade Kit. These accessories are available separately.

### DRIVER SIDE FRONT



ADJ140-A
Unit Size: 850mm w x 1370mm h
End panels: 920mm high end panels
No. of shelves: 4
Shelf Depth: 310mm (Row 1), 410mm (Rows 2-4)
Plastic Bins: None

### DRIVER SIDE REAR



ADJ140-B
Unit Size: 1080mm w x 1370mm h
End panels: 920mm high end panels
No. of shelves: 4
Shelf Depth: 310mm (Row 1), 410mm (Rows 2-4)
Plastic Bins: None

### PASSENGER SIDE REAR



ADJ140-B
Unit Size: 1080mm w x 1370mm h
End panels: 920mm high end panels
No. of shelves: 4
Shelf Depth: 310mm (Row 1), 410mm (Rows 2-4)
Plastic Bins: None

### PLASTIC OPTIONS (EACH SOLD SEPARATELY)

**ROW 1 PLASTICS**



**PBC 3.0**

100mm W x 300mm D x 100mm H

**ROWS 2 - 4 PLASTICS**



**PBC 4.0**

100mm W X 400mm D X 100mm H

**ROWS 2 - 4 PLASTICS**



**PBC 8.0**

200mm W X 400mm D X100mm H